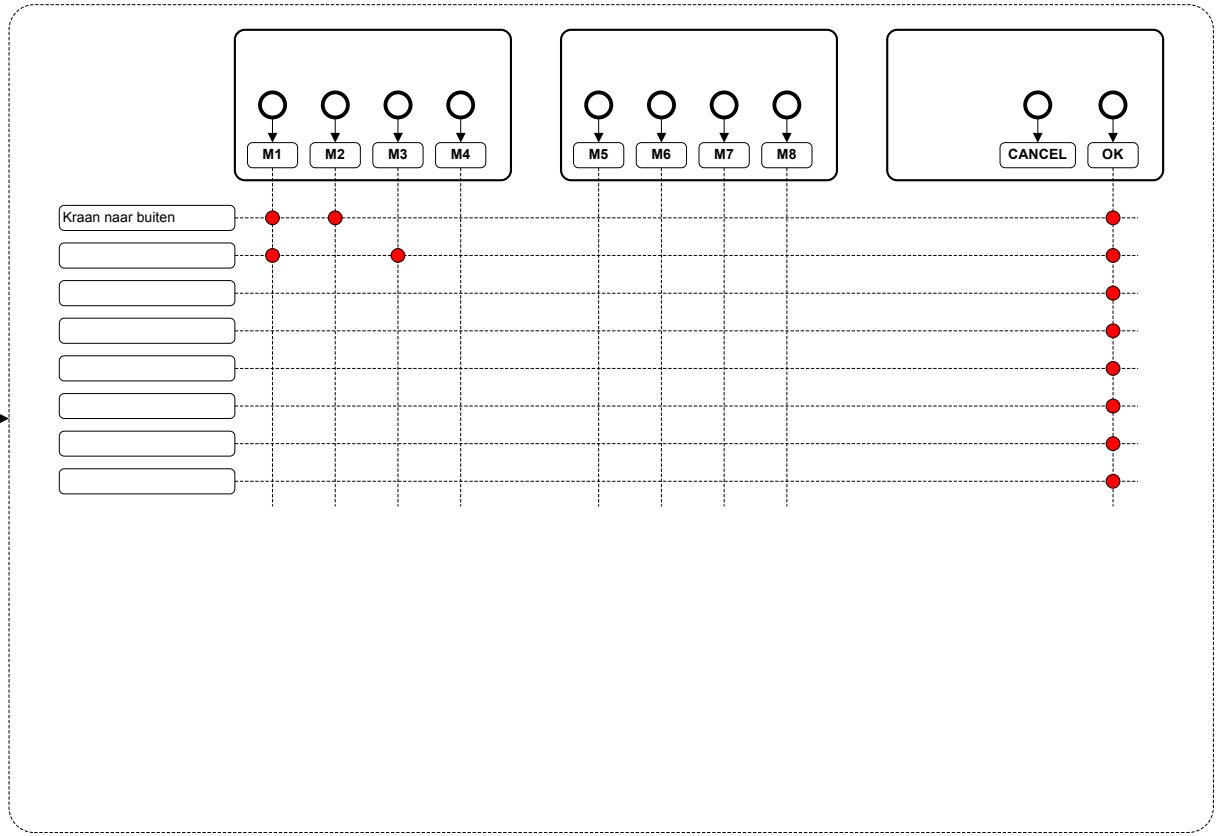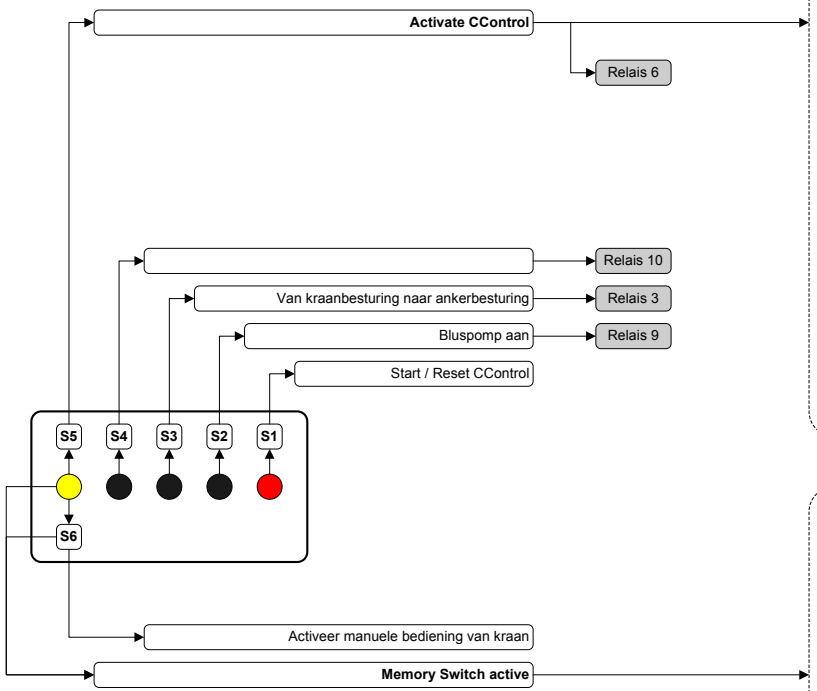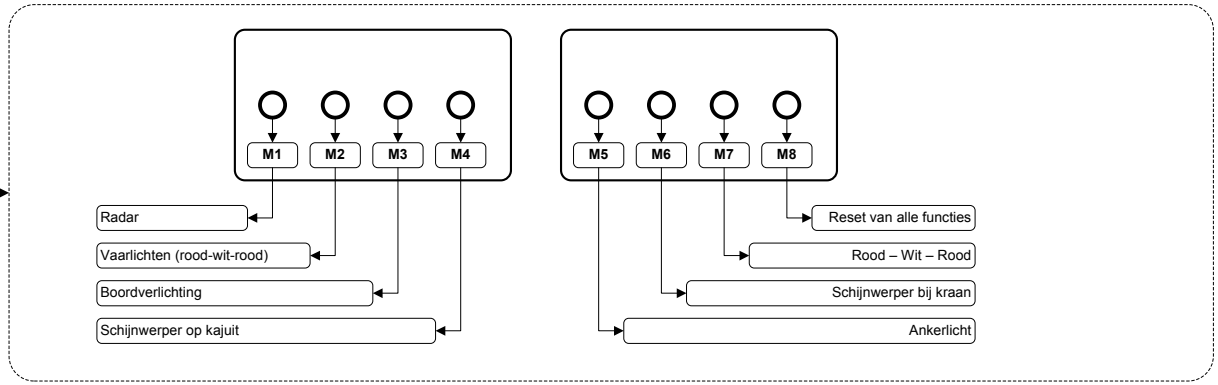Zender bediening Norderney | Multiswitch, Memoryswitch en CControl